
MANUFACTURED BY
AIR TRACTOR, INC.
OLNEY, TEXAS 76374
802A
DIMENSIONAL
DRAWING

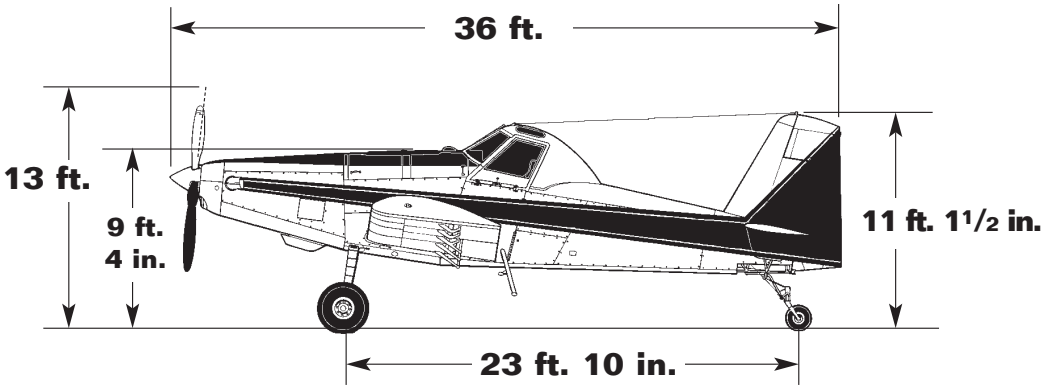
36 ft.
13 ft.
9 ft.
4 in.
11 ft. 1 1/2 in.
23 ft. 10 in.

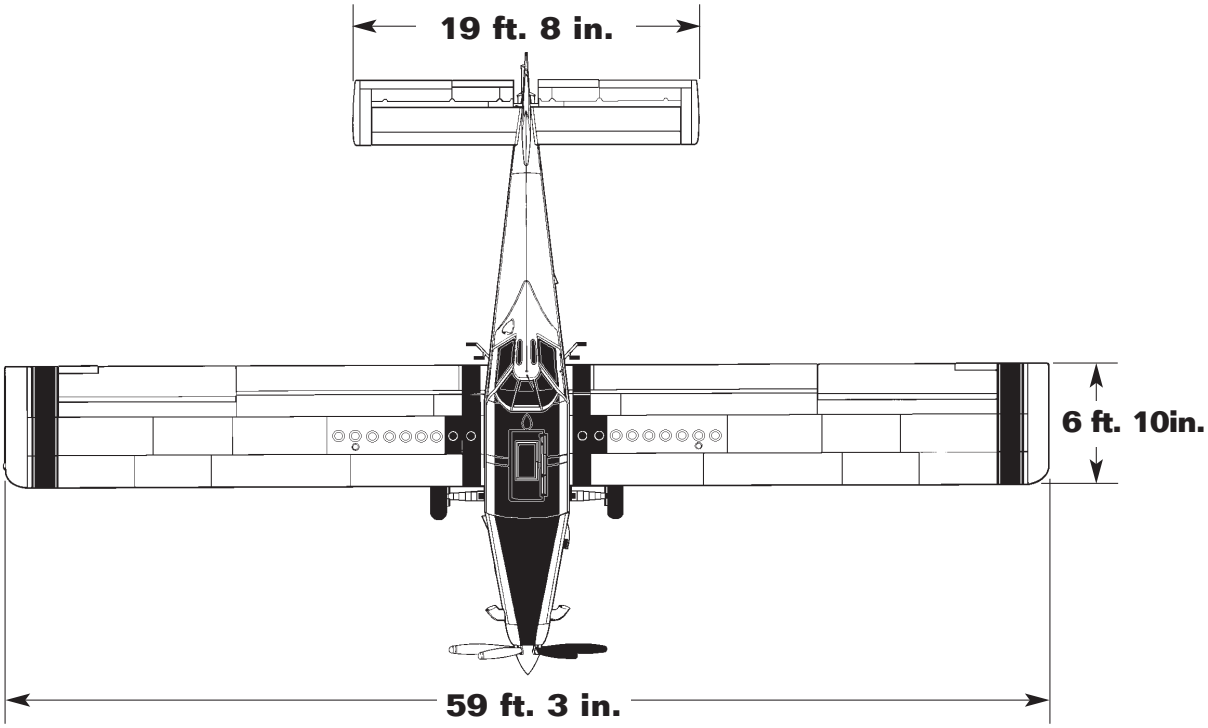
19 ft. 8 in.
6 ft. 10in.
59 ft. 3 in.

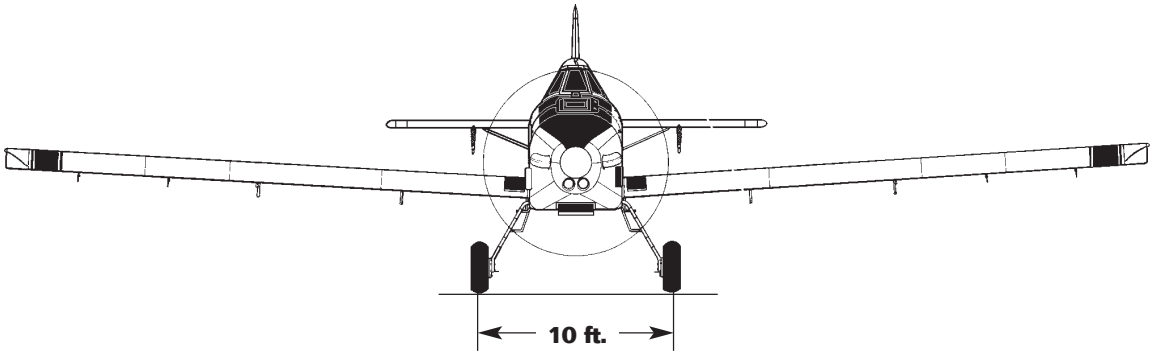
10 ft.